DW PTS (WT34) 42/8-4 (FV2/15/16) TANK SUMP

(Installed / Fill / Vapor Sump)

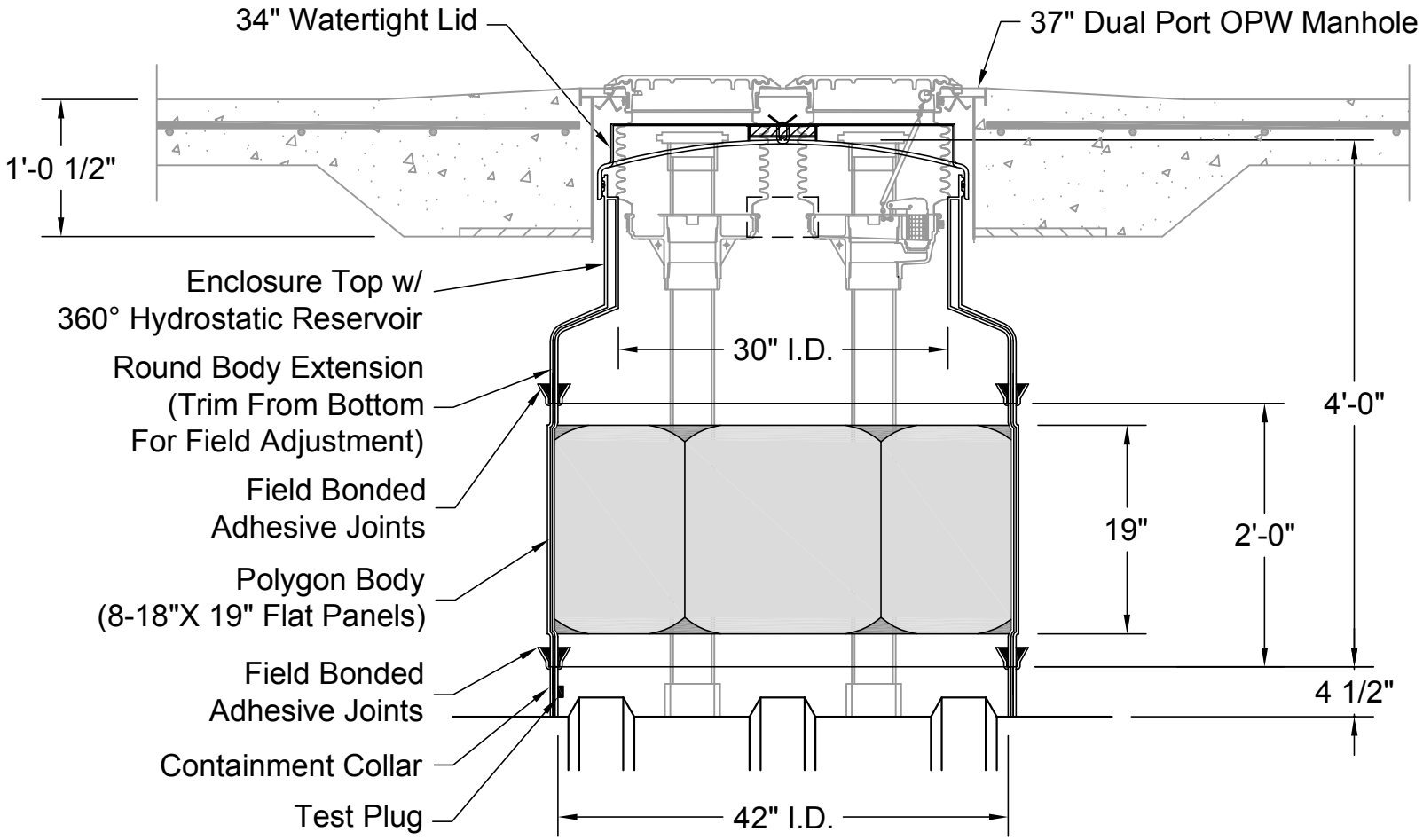

CONTAINMENT SOLUTIONS

DW PTS (WT34) 428-4 (FV2-15-16)
Concrete.DWG
9/2010